| DRAWING NUMBER |
|---|
| SSL4-2006 |

| REVISION | DESCRIPTION OF CHANGE | DATE | ECO NUMBER | APPROVED BY |
|---|---|---|---|---|
| A | INITIAL PDM DESIGN | 1/7/2010 | - | S. THAO |

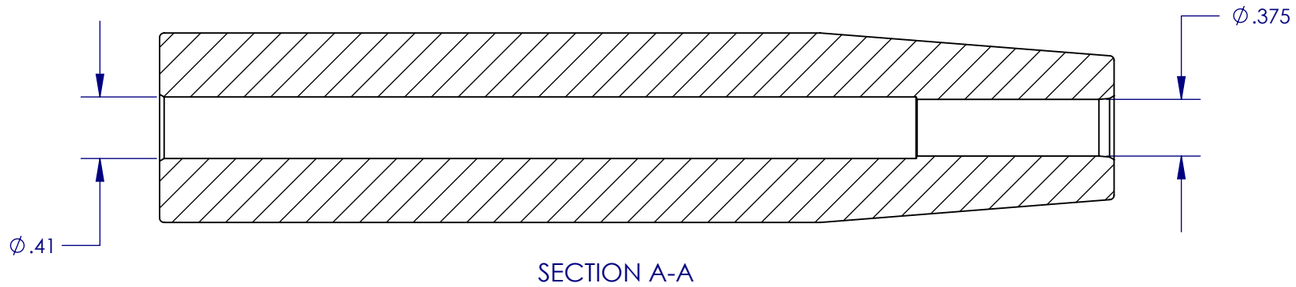


SECTION A-A

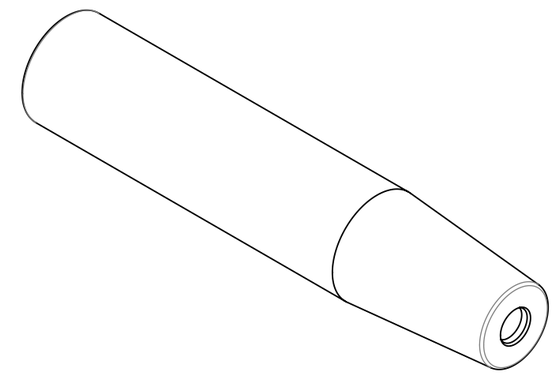

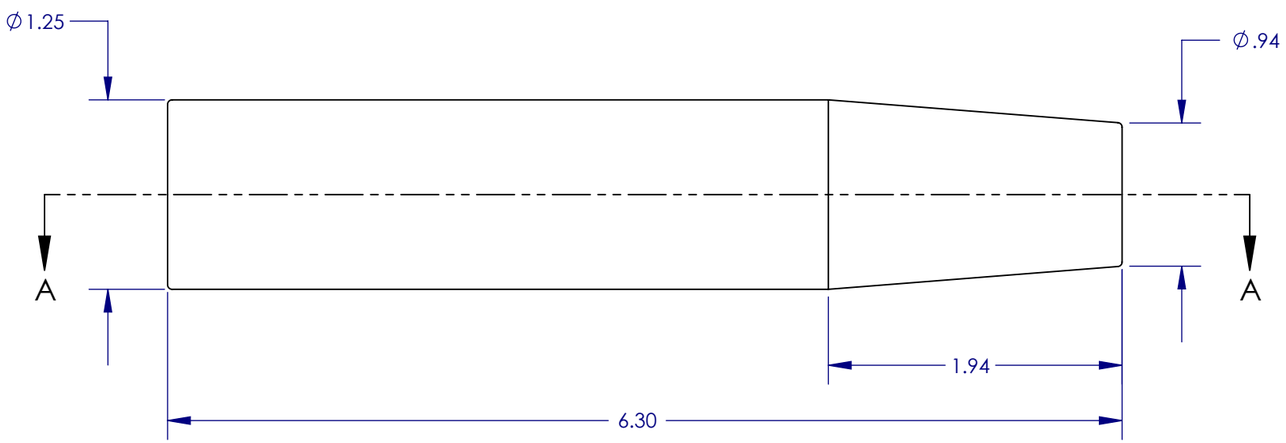


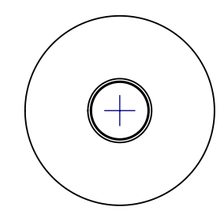

| PART NUMBER | DRAWING NUMBER |
|---|---|
| SSL4-2006 | SSL4-2006 |

EWS Group COMMAND TOOLING SYSTEMS

**4.5 DEG 1.250 OD 0.375 ID SFE 6.299 OAL**

| MODEL STATE | | |
|---|---|---|
| FINISHED COMPONENT | | |
| DESIGN STATUS: RELEASED | | REV.: A |
| DRAWN BY: S. THAO | DATE: 1/7/2010 | SCALE: 1:1 |
| SIZE: B | SHEET: 1 OF 1 | |